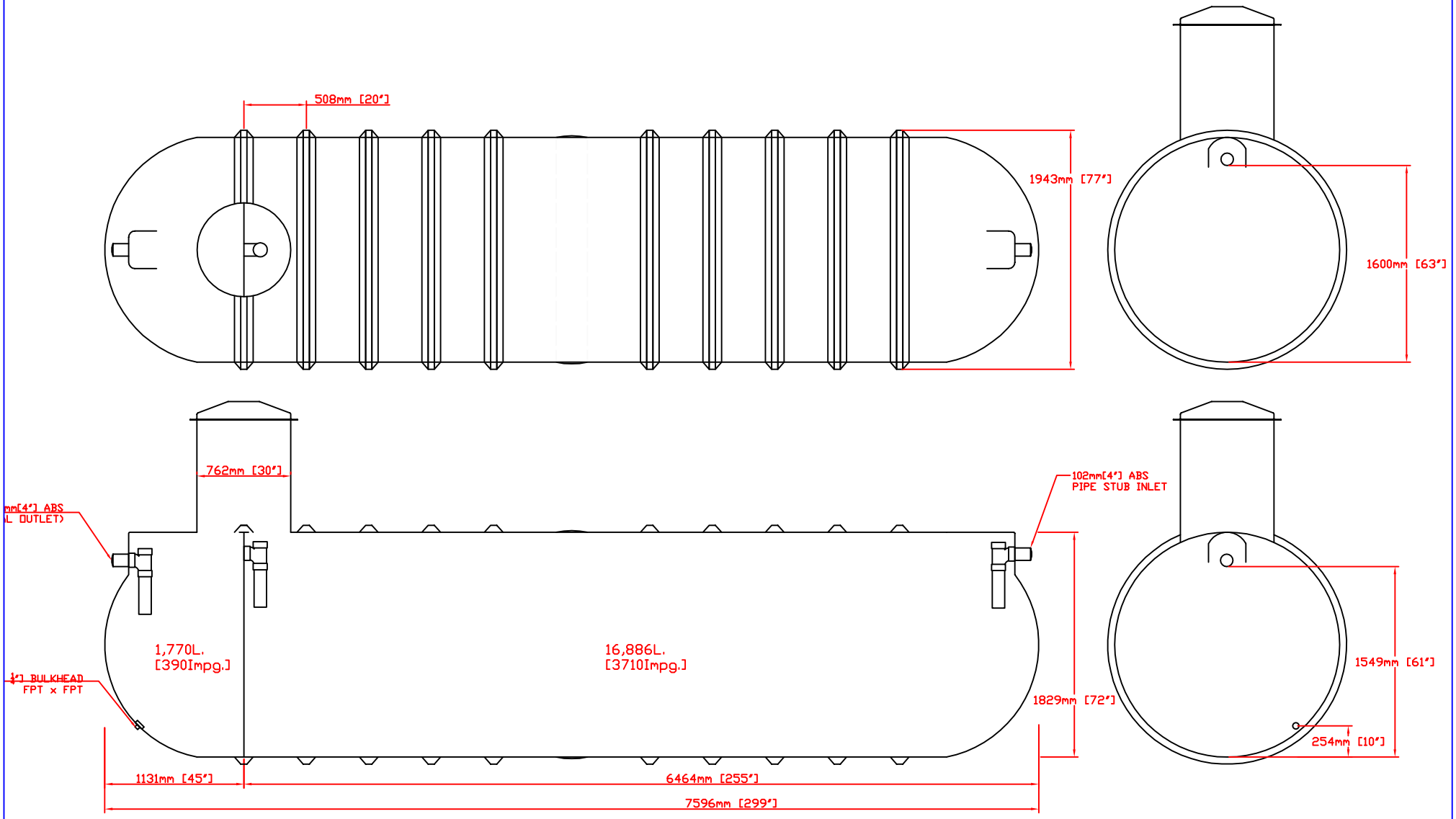

REVISIONS

Concrete & Fiberglass Products Ltd.
712 KERNSTEAD RD. WINNIPEG BEACH, MB R0C 3G0
PH: (204) 389-2651 FAX: (204) 389-6628
EMAIL: INFO@DLPRODUCTS.CA WEBSITE: WWW.DLPRODUCTS.CA

4100 GT/P
18,614L./4100Impg.

DATE:	DRAWN BY:
	AZ
SCALE:	PAGE:
	-- OF --